Journal of Engineering Science and Technology
Vol. 12, No. 6 (2017) 1506 - 1513
© School of Engineering, Taylor's University

MODELING OF TUBULAR ELECTROCHEMICAL REACTOR FOR DYE REMOVAL

V. VIJAYAKUMAR, R. SARAVANATHAMIZHAN*, N. BALASUBRAMANIAN

Department of Chemical Engineering, A.C. Tech Campus,
Anna University, Chennai-600025, India
*Corresponding Author: thamizhan79@rediffmail.com

Abstract

The aim of the present investigation is to model a tubular electrochemical reactor for the treatment of synthetic dye wastewater. The tubular reactor was modeled and solved by finite difference method. For the model solution, the column was divided into 11 nodes in the axial direction and the variation in the radial direction has been neglected. An initial dye concentration of 200 mg $L^{-1}$was taken in the reservoir. The reactor was operated in a batch with recirculation operation. Based on preliminary experiments all parameters have been optimized. The model simulation is compared with the experimental value and it is observed that the model fairly matches well with the experiment. The modeling of tubular electrochemical reactors for dye waste water treatment could be useful in the design and scale up of electrochemical process.

Keywords: Tubular electrochemical reactor, Dye waste water, Finite difference, Modeling.

1. Introduction

Electrochemical techniques have been receiving greater attention in recent years due to the distinctive advantages of environmental compatibility, versatility and safety. Electrochemical methods compete with other conventional technologies including evaporation, precipitation, ion exchange and solvent extraction to offer solutions to the needs of the many industries [1].

In industry level various electrochemical reactors are used for the waste water treatment applications such as tank cells, plate and frame cells, tubular electrochemical reactor, rotating cells, to complicated three-dimensional electrode reactor systems like fluidized bed, packed bed cell, or porous carbon packing cells

[2]. The materials for waste water treatment are dimensionally stable anodes (*DSA*) made of titanium substrate coated with thin layer of noble metal oxides, which have been used extensively in electrochemical industry. The electro-oxidation of different kinds of wastewater had been investigated by numerous researchers using different types of the electrochemical reactors [3 - 5].

Modeling of electrochemical reactor is important for the scale up and design to industrial level. In industrial scale one of the most common types of the electro chemical reactor is tubular reactor. Tubular reactor is widely studied by the researchers for the wastewater treatment and modeling [6, 7]. Tubular reactor is frequently assumed as dispersed plug flow of fluid inside the reactor. There is a gradual reduction of dye concentration in the reservoir of batch operation with recirculation system. In order to design and model the plant process, the development of a model is essential which permits the prediction of the variation of dye concentration with time in the reservoir of batch with recirculation operation. The flow in the tubular electrochemical reactor is considered as plug flow model and dispersed plug flow (one parameter) model [3].

Many researchers have modeled the tubular electrochemical reactor for the waste water treatment. Mustoe and Wragg [8] developed a model to obtain concentration as a function of time in an electrochemical tubular reactor for a batch with recirculation operation using dispersed plug-flow model. The author reported that the experimental data obtained for the electrodeposition of copper and silver from dilute solutions matches well with dispersed plug-flow model. Korbathi and Tanyolac [9] modeled tubular electrochemical rector for phenol removal. The author included the weight ratio function in the dispersed plug flow equation and used finite difference method to solve the model equation. The authors observed that the experimental results matches well with the model simulations. Maria Georgiadou used a finite-difference method for predicting the current-density distribution in electrochemical systems. The results were compared to experimental measurements for the copper ion and the ferricyanide ion reduction [10]. Martinez and Rodriguez [11] experimented *Cr(VI)* removal as a function of pH and residence time, in a plug flow reactor with a spiral carbon steel as anode. The author observed that the dynamical model of process for the chromium removal satisfactorily matches well with the experimental chromium removal.

In the present study, the treatment of dye waste water in a tubular electrochemical reactor was considered and the governing equation was solved by means of finite difference method. The finite difference method is a frequently-used and more applicable method than any other numerical methods available for simple as well as complex problems [9]. Batch with recirculation operation were also performed in a tubular electrochemical reactor to find the optimum conditions of the operational parameters and reaction kinetics.

2. Model development

Axial dispersion model is used to represent the tubular electrochemical reactor for the present investigation. To determine the exit concentration of the pollutant in the *z*-direction for unsteady state condition, a differential elemental length *'∂z'* along the length of reactor was chosen and writing the mass balance over the differential element of length *'∂z'* gives [12]:

$$D_s \frac{\partial^2 C_A}{\partial z^2} - \vartheta \frac{\partial C_A}{\partial z} - [kC_A^{\alpha}] = \frac{\partial C_A}{\partial t} \quad (1)$$

where, C_A is the concentration of dye(mg L^{-1}), ϑ is axial flow velocity (m s^{-1}) D_s is diffusivity of dye (m^2 s^{-1}), k is rate constant (s^{-1}), α is order of the reaction. The diffusivity is calculated using Nernst-Heckel equation [13]:

$$D_s = (8.928 \times 10^{-10}) \cdot T \cdot \frac{\left(\frac{1}{n_+} + \frac{1}{n_-}\right)}{\left(\frac{1}{\lambda_+} + \frac{1}{\lambda_-}\right)} \quad (2)$$

where, T is Temperature (K), n_+, n_- is valence of the cation and valence of the anion respectively, λ_+, λ_- is the limiting ionic conductance of the cation and of the anion respectively (A/m^2) · (V/m) · (g.equiv./m^2). D_s is calculated for the present work to be 5.25×10^{-6} m^2s^{-1} at 298 K.

The tubular electrochemical reactor was divided into 11 nodes in z-direction. Mass balance equation, Eq. (1), is written using finite difference method. The first and second order spatial partial derivatives in the partial differential equation were written using central difference formulation at any node in z direction, except boundary node along the height of reactor. Time derivative term is written using backward difference formulation. The finite difference formulation for the individual node can be written as:

$$D_s \cdot \left(\frac{C_{A_{Z+1}}^{t} + C_{A_{Z-1}}^{t} - (2 \cdot C_{A_Z}^{t})}{\Delta z^2}\right) - \vartheta \cdot \left(\frac{C_{A_{Z+1}}^{t} - C_{A_{Z-1}}^{t}}{(2 \cdot \Delta z)}\right) - kC_{A_Z}^{t} = \frac{C_{A_Z}^{t} - C_{A_Z}^{t-\Delta t}}{\Delta t} \quad (3)$$

The partial derivative for the boundary node using backward difference formulation is written as:

$$D_s \cdot \left(\frac{C_{A_Z}^{t} - (2 \cdot C_{A_{Z-1}}^{t}) + C_{A_{Z-2}}^{t}}{\Delta z^2}\right) - \vartheta \cdot \left(\frac{C_{A_Z}^{t} - C_{A_{Z-1}}^{t}}{\Delta z}\right) - kC_{A_Z}^{t} = \frac{C_{A_Z}^{t} - C_{A_Z}^{t-\Delta t}}{\Delta t} \quad (4)$$

Equations (3) and (4) are simplified and can be written as:

$$C_{A_Z}^{t} - \left[\frac{(b-a) \cdot C_{A_{Z+1}}^{t} + (a+b) \cdot C_{A_{Z-1}}^{t} + C_{A_Z}^{t-\Delta t}}{(1+2b+m)}\right] = 0 \quad (5)$$

$$C_{A_Z}^{t} - \left[\frac{(2a-2b) \cdot C_{A_{Z-1}}^{t} + (b) \cdot C_{A_{Z-2}}^{t} + C_{A_Z}^{t-\Delta t}}{(1+2a-b+m)}\right] = 0 \quad (6)$$

where

$$a = \frac{\vartheta \cdot \Delta t}{2 \cdot \Delta z}; b = \frac{D_s \cdot \Delta t}{\Delta z^2}; \qquad m = k \cdot \Delta t \quad (7)$$

Concentration of the pollutant at any node along the length of the reactor has been obtained from Eqs. (5) and (6). The above equations have been solved for $C_{A_Z}^{t}$ using Microsoft® Excel *SOLVER* function to obtain the concentration of the pollutant at any node '*z*' and at time'*t*'.

3. Experimental

The schematic diagram of the Tubular electrochemical reactor is shown in Fig. 1. The tubular reactor consists of a tubular electrode, electrolyte reservoir, centrifugal pump, flow meter and a power supply with necessary fittings.

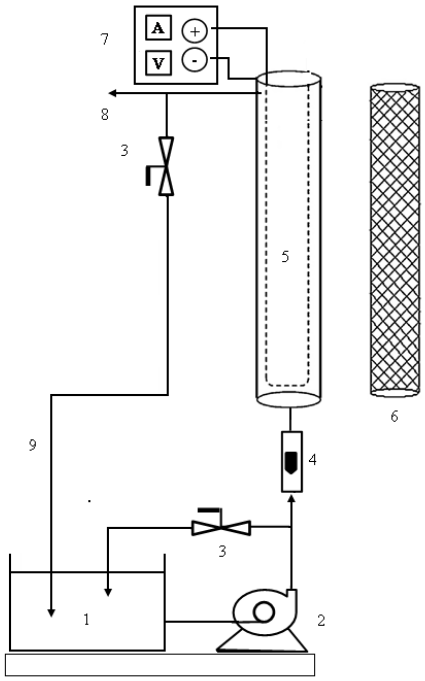

Fig. 1. Schematic diagram of tubular electrochemical reactor with recirculation: 1. Reservoir, 2. Centrifugal pump, 3. Control valve, 4. Rotameter, 5. Tubular reactor, 6. Cylindrical mesh anode, 7. DC Power supply, 8. Reactor outlet, 9. Recirculation mode operation.

The cathode is made of stainless steel with a diameter of 0.07 m and a height of 1.1 m. The thickness of the tube is 0.002 m. The anode is made of RuO_2 coated Ti mesh, perforated (60%) and tubular of diameter 0.05 m and height 1.0 m which resulted in an effective anode area of 0.0628 m^2. The anode is inserted inside the cathode, and is sealed with the end frames. In the cylindrical electrolytic cell, a batch recirculation operation was performed. Electrodes are fixed in the cylindrical cell frame with a spacing of 0.02 m. The tubular electrochemical cell volume is measured as 0.0038 m^3. The cylindrical electrolytic cell is fixed with a rigid frame, and the electrodes are connected to a power supply made of AE Rectifier (230 V input, 0 - 50 V output, 100 A). DC power is supplied to the electrodes according to the required current density and the experiments are carried out under constant current conditions.

Synthetically prepared dye solution of 200 mg $L^{-1}$was taken in the reservoir. The pump inlet is connected to the reservoir and the outlet of the pump was connected to the cylindrical reactor inlet. The flow rate of dye solution has been measured using a flow meter connected to the inlet line of the reactor. The cylindrical reactor outlet was recirculated to the reservoir for the batch with recirculation operation. The samples collected at equal time interval were analyzed for *COD* using Uniphos®*COD* digester. The *COD* reduction measured as:

$$C/Ci = (COD \text{ after electrolysis})/(COD \text{ before electrolysis}) \quad (8)$$

4. Results and Discussion

The model simulation of the tubular electrochemical reactor using central difference formulation, Eqs. (5) and (6) for different time interval is shown in Fig. 2. For the model solution, the column was divided into 11 nodes in the axial direction and the variation in the radial direction has been neglected. Model parameter such as rate constant (8.3×10^{-5} s^{-1}), diffusion coefficient (5.25×10^{-6} m^2s^{-1}) has been chosen from the experiment and the equation has been solved using Microsoft® Excel *SOLVER* function for the time interval of 10 seconds with 10^{-6} accuracy. The model simulation has been done for the dye concentration of 200 mgL^{-1} and the result at each node along the length of the reactor (from node 2, z = 0.1 m to node 11, outlet, z = 1 m) is shown in Fig. 2. It is observed form this figure, that the inlet of the tubular electrochemical reactor (z = 0 m), and the concentration of pollutant in the reaction medium remains constant. At length z = 0.1 m, z = 0.2 m, z = 0.3 m, z = 0.4 m, z = 0.5 m, z = 0.6 m, z = 0.7 m, z = 0.8 m, z = 0.9 m and z = 1 m (outlet), the degradation of the pollutant reaches its steady state at 90 min, 100 min, 100 min, 105 min, 110 min, 115 min, 120 min, 130 min, 145 min, 150 min respectively.

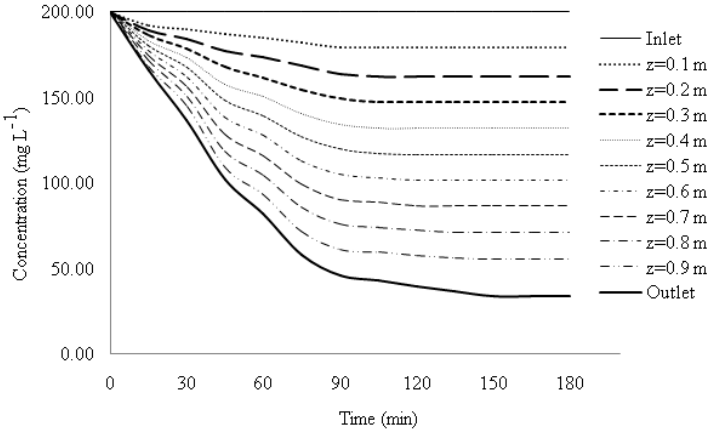

Fig. 2.Variation of concentration of Evan's blue dye along the length of tubular electrochemical reactor with respect to time current density: 90 Am^{-2}; *pH* :7; flow rate: 100 L h^{-1};initial concentration: 200 mg L^{-1} ; NaCl concentration: 1 g L^{-1}; rate constant *k*: 8.3×10^{-5} s^{-1}.

The effect of flow rate on *COD* reduction is shown in Fig. 3. It is observed from this figure that the *COD* reduction increases with increase in flow rate. At higher flow rates the destruction of organic content is more due to increased production of oxidants in the process and the transfer coefficient increases with increase in flow rate [14, 15]. This type of oxidation is indirect electro oxidation happening in the presence of chloride. The hypochlorite ions are the main reagent for the organic degradation in the indirect oxidation. In this case, as the electrolyte circulation rate increases, the transport of the Cl^-ion from the bulk to the electrode surfaces increases. This would facilitate Cl_2generation, as well as the dissolution of Cl_2 to form OCl^- for reaction with the organic contaminant, which tern increases the rate of degradation.

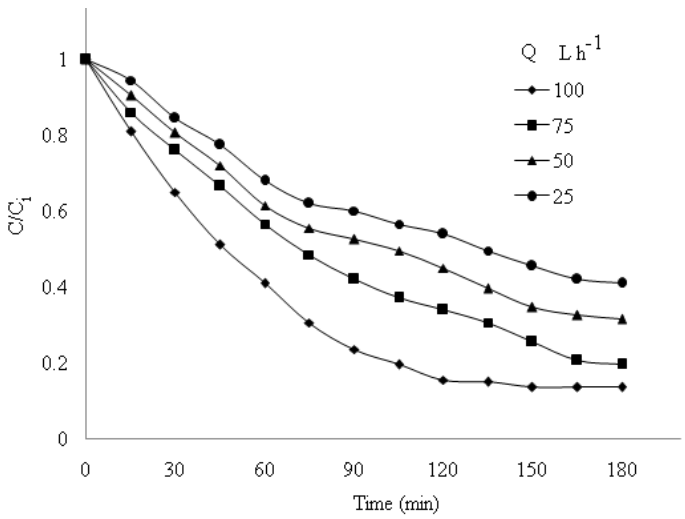

Fig. 3. Variation of *COD* reduction with electrolysis time at different flow rates current density: 90 Am^{-2}; initial dye concentration: 200 mgL^{-1}; NaCl concentration:1 gL^{-1}.

The comparison of model simulation for the 200 mg L^{-1} dye concentration for the flow rate of 100 L h^{-1} is shown in Fig. 4. It is observed form this figure that the model satisfactorily matches with the experimental result. Similar results were observed for the other flow rates also.

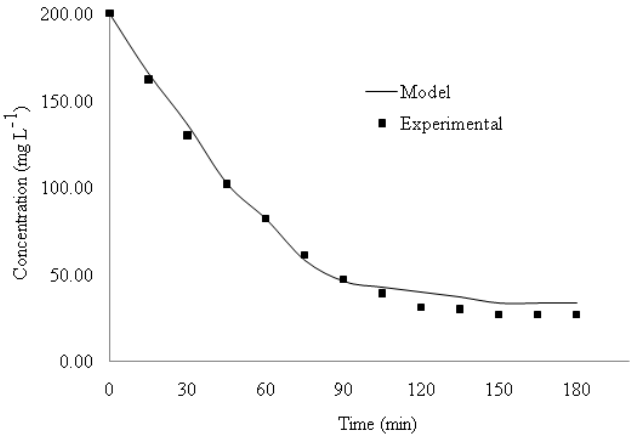

Fig. 4. Comparison of model and experiment outlet concentration of Evan's blue dye concentration current density: 90 A m^{-2}; flow rate: 100 L h^{-1}; initial concentration: 200 mgL^{-1}; NaCl concentration: 1 g L^{-1}.

5. Conclusion

Continuous tubular electrochemical reactor has been modeled using finite difference method for the treatment of dye waste water. In this work the Evans blue dye effluent has been treated using tubular electrochemical reactor using this

DSA electrode. The simulation has been carried out using Microsoft Excel Solver function. It has been concluded from the present investigation that the developed model satisfactorily matches with the experimental value. Modeling of a tubular electrochemical reactor could provide important information for the design, operation and scaling up of pilot reactors for wastewater treatment.

References

1. Jüttner, K.; Galla, U.; and Schmieder, H. (2000). Electrochemical approaches to environmental problems in the process industry. *Electrochimica Acta*, 45(15-16), 2575-2594.
2. Guohua, C. (2004). Electrochemical technologies in wastewater treatment. *Separation and Purification Technology*, 38(1), 11-41.
3. Ahmed Basha, C.; Somasundaram, M.; Kannadasan, T.; and Lee, C.W. (2011). Heavy metals removal from copper smelting effluent using electrochemical filter press cells. *Chemical Engineering Journal*, 171(2), 563- 571.
4. Ahmed Basha, C.; Bhadrinarayana, N.S.; Anantharaman, N.; and Meera Sheriffa Begum, K.M. (2008). Heavy metal removal from copper smelting effluent using electrochemical cylindrical flow reactor. *Journal of Hazardous Materials*, 152(1), 71-78.
5. Dantas, T.L.P.; Mendonca, V.P.; José, H.J.; Rodrigues, A.E.; and Moreira, R.F.P.M. (2006). Treatment of textile wastewater by heterogeneous Fenton process using a new composite Fe_2O_3/carbon. *Chemical Engineering Journal*, 118(1-2), 77-82.
6. Kovo, A.S. (2008). Mathematical modeling and simulation of dispersion in a nonideal plug flow reactor. *Journal of Dispersion Science and Technology*, 29(8), 1129-1134.
7. Martínez-Delgadillo, S.A.; Mollinedo, P.H.R.; Gutiérrezc, M.A.; Barcelóa, I.D.; and Méndezd, J.M. (2010). Performance of a tubular electrochemical reactor operated with different inlets to remove Cr(VI) from wastewater. *Computers and Chemical Engineering*, 34(4), 491-499.
8. Mustoe, L.H.; and Wragg, A.A. (1978). Concentration-time behaviour in a electrochemical reactor system using a dispersed plug-flow model. *Journal of Applied Electrochemistry*, 8(5), 467-472.
9. Körbahti, B.K.; and Tanyolaç, A. (2003). Modeling of a continuous electrochemical tubular reactor for phenol removal. *Chemical Engineering Communications*, 190(5-8), 749-762.
10. Georgiadou, M. (1997). Finite-difference simulation of multi-ion elecfrochemical systems governed by diffusion, migration, and convection. *Journal of the Electrochemical Society*, 144(8), 2732-2739.
11. Martinez, S.A; and Rodriguez, M. (2007). Dynamical modeling of the electrochemical process to remove Cr (VI) from wastewaters in a tubular reactor. *Journal of Chemical Technology and Biotechnology*, 82(6), 582-587.
12. Levenspile, O. (1999). *Chemical reaction engineering*, (3rd ed.). John Wiley & Sons Publication, New York.

13. Geankoplis, C.J. (2003). *Transport process and separation process principles (includes unit operations) (4th ed.)*. Pearson Education Inc., USA.
14. Skban Ibrahim, S.; Seethala Devi, P.; Veerababhu, C.; and Balasubramanian, N. (2014). Treatment of petroleum effluent using a tubular electrochemical reactor. *Petroleum Science and Technology*, 32(16), 1932-1939.
15. Ahmed Basha, C.; Soloman, P.A.; Velan, M.; Miranda, L.R.; Balasubramanian, N.; and Siva, R. (2010). Electrochemical degradation of specialty chemical industry effluent. *Journal of Hazardous Materials*, 176(1-3), 154-164.